Punjab Thermal Power (Pvt.) Limited

Registrar
National Electric Power Regulatory Authority
NEPRA Tower, Ataturk Avenue (East) G-5/1

Date: September 21st, 2026
Ref: PTPL/CEO/11584/2026

Subject: **APPLICATION FOR APPROVAL OF LICENSEE PROPOSED MODIFICATION IN GENERATION LICENSE NO. IGSPL/97/2018 OF PUNJAB THERMAL POWER (PRIVATE) LIMITED**

Dear Sir,

Punjab Thermal Power (Private) Limited (**"PTPL"**), company owned by Government of the Punjab (**"GoPb"**), hereby submits to the Authority, the application / petition for approval of licensee proposed modification to its Generation License No. IGSPL/97/2016 for its 1263 MW Punjab Power Plant, Jhang.

Enclosed herewith is the above application / petition alor

(Salman Zakaria)
Chief Executive Officer

BEFORE

THE NATIONAL ELECTRIC POWER REGULATORY AUTHORITY (NEPRA)

IN THE MATTER OF

APPLICATION FOR LICENSEE PROPOSED MODIFICATION IN GENERATION LICENSE NO. IGSPL/97/2018 OF PUNJAB THERMAL POWER (PRIVATE) LIMITED

ON BEHALF OF

PUNJAB THERMAL POWER (PRIVATE) LIMITED (PTPL)

DATED: SEPTEMBER 21ST, 2026

TABLE OF CONTENTS

Contents

1. INTRODUCTION 3
2. BACKGROUND 3
3. SUMMARY OF PROPOSED MODIFICATION 3
4. DESCRIPTION OF PROPOSED AMENDMENTS 4
5. STATEMENT OF REASONS AND JUSTIFICATION 11
6. IMPACT ASSESSMENT 11
7. PRAYER / REQUEST 12
BOARD OF DIRECTORS' RESOLUTION 13
AFFIDAVIT 15
ANNEX-A: REVISED LAYOUT AND LAND COORDINATES OF THE GENERATION FACILITY / THERMAL POWER PLANT OF THE LICENSEE 17
ANNEX-B: REVISED SINGLE LINE DIAGRAM (ELECTRICAL) OF THE GENERATION FACILITY / THERMAL POWER PLANT OF THE LICENSEE 19

APPLICATION FOR LICENSEE PROPOSED MODIFICATION IN GENERATION LICENSE NO. IGSPL/97/2018 PUNJAB THERMAL POWER (PRIVATE) LIMITED

1. INTRODUCTION

1.1. Punjab Thermal Power (Private) Limited (hereinafter **"PTPL"** or the **"Licensee"**) is a private limited company, wholly owned by the Government of Punjab (**"GoPb"**), incorporated under the Companies Act 2017. PTPL, an RLNG combined cycle power plant of 1,263.2 MW (net 1,242.7 MW), was conceived and intended to supplement national generation capacity with a reliable, dispatchable, and competitively priced energy source under Power Policy 2015.

2. BACKGROUND

2.1. The Licensee was granted Generation License No. IGSPL/97/2018 on February 15, 2018 (the **"Generation License"**) by the National Electric Power Regulatory Authority (the **"Authority"** or **"NEPRA"**).

2.2. Under Regulation 10 of the NEPRA Licensing (Application, Modification, Extension and Cancellation) Procedure Regulations, 2021 (the **"Regulations"**), a Licensee may at any time propose a modification to its license.

2.3. PTPL, in accordance with Regulation 10(2) of the Regulations and other applicable provisions of the Regulation for Generation, Transmission and Distribution of Electric Power Act 1997 (the **"Act"**), Rules and Regulations, submits this Application for Licensee Proposed Modification (the **"LPM Application"**) in respect of its Generation License before NEPRA.

3. SUMMARY OF PROPOSED MODIFICATION

3.1. The Licensee seeks to modify Schedule-I & II of the Generation License to align the technical parameters with the actual performance data achieved during Commissioning Tests at the time of COD. Description of the proposed modifications in following heads:

1. Proposed Modification of Layouts / Drawings:

a. Schedule – I: Layout and Land Coordinated of Generation Facility / Thermal Power Plant of the Licensee
b. Schedule – I: Single Line Diagram (Electrical) of the Generation Facility / Thermal Power Plant of the Licensee

2. Proposed Modification of Language:

c. Schedule – I: Detail of Generation Facility / Thermal Power Plant – (B)(iv)
d. Schedule – I: Detail of Generation Facility / Thermal Power Plant – (C)(iv)
e. Schedule – I: Detail of Generation Facility / Thermal Power Plant – (C)(vii), (C)(viii)
f. Schedule – I: Detail of Generation Facility / Thermal Power Plant – (F)(i)
g. Schedule – I: Detail of Generation Facility / Thermal Power Plant – (F)(i), (vii)
h. Schedule – II

4. DESCRIPTION OF PROPOSED AMENDMENTS

1. Text of the Proposed Modification

a. Schedule-I: Layout and Land Coordinates of the Generation Facility / Thermal Power Plant of the Licensee

Original

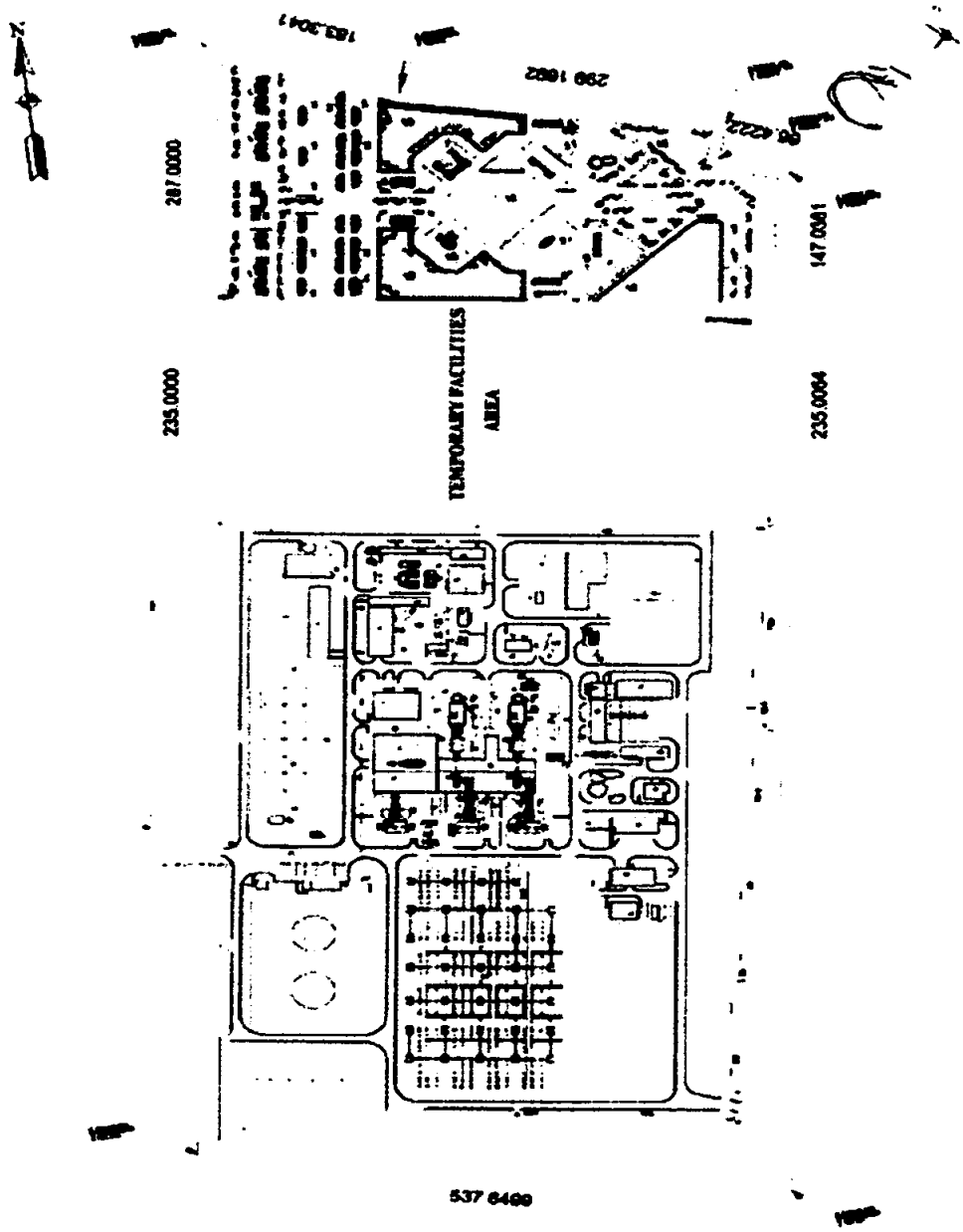

Amended

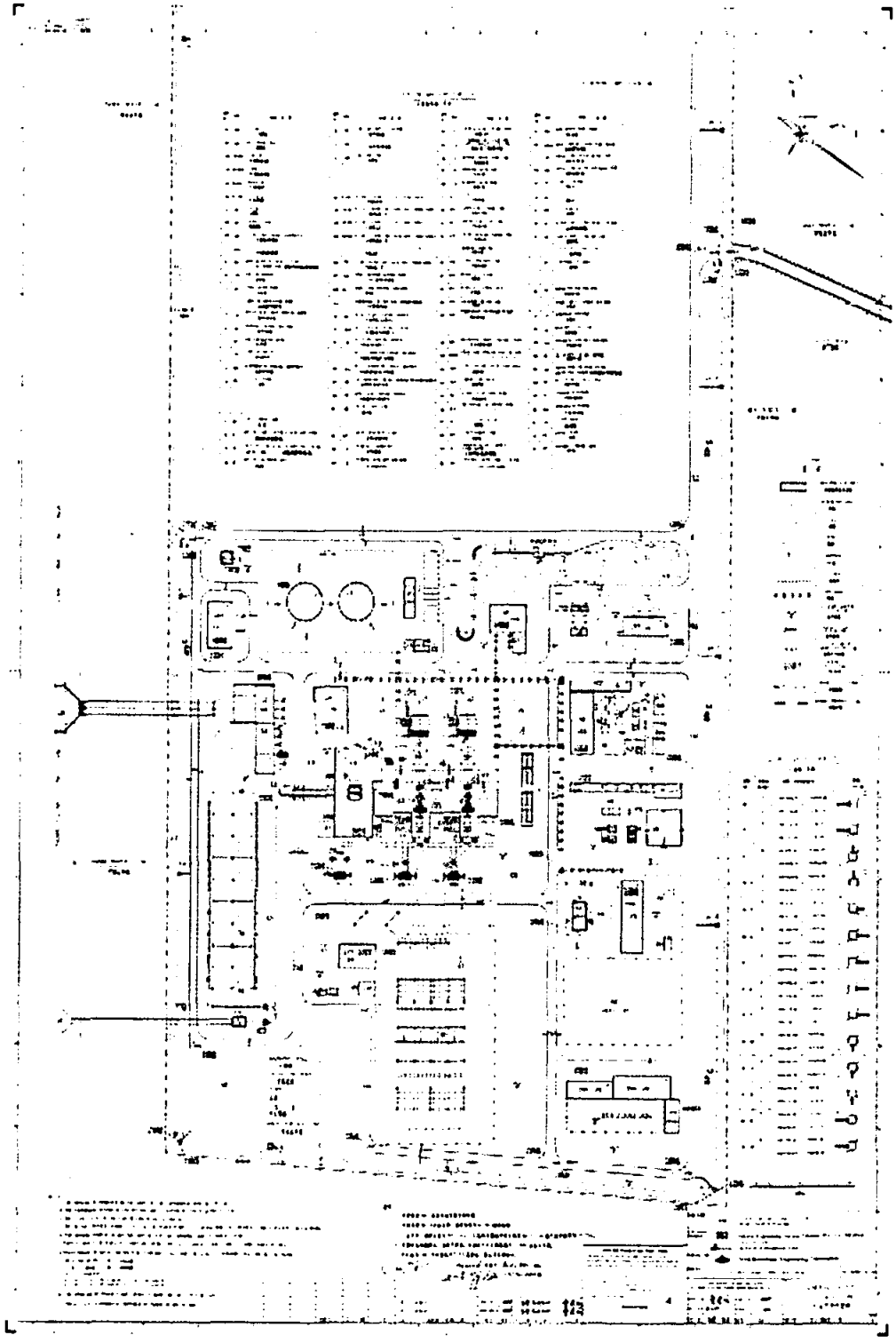

(Revised Layout attached with LPM Application as Annex-A)

b. **Schedule-I: Single Line Diagram (Electrical) of the Generation Facility / Thermal Power Plant of the Licensee**

Original

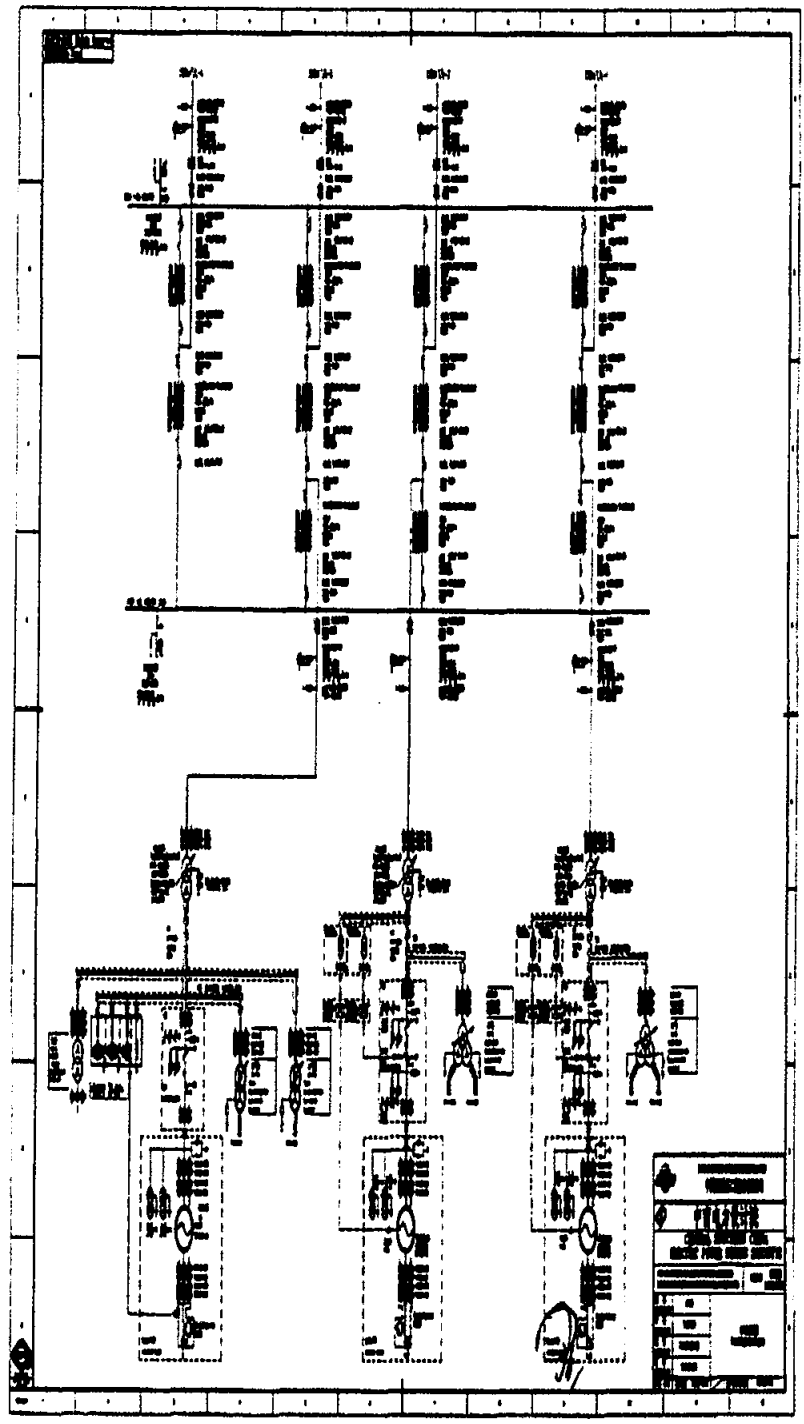

Amended

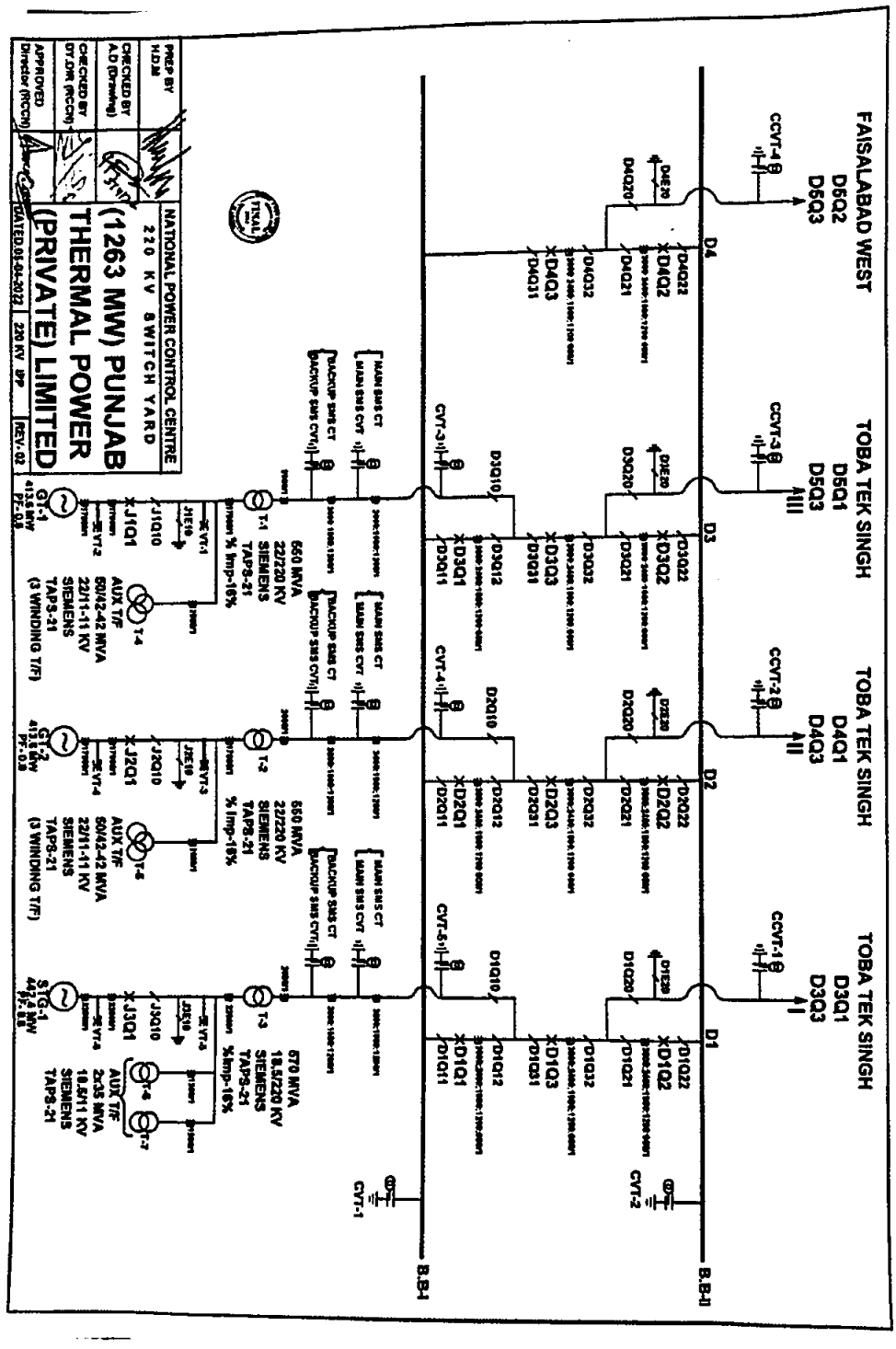

(Revised Single Line Diagram attached with LPM Application as Annex-B)

c. **Schedule-I: Detail of Generation Facility / Thermal Power Plant – (B) (iv)**

Original Language

Clause	Original	
(iv)	COD of the Generation Facility / Thermal Power Plant	March 31, 2020 (Anticipated)

Amended Language

Clause	Amended	
(iv)	COD of the Generation Facility / Thermal Power Plant	June 23, 2023

d. **Schedule-I: Detail of Generation Facility / Thermal Power Plant – (C) (iv)**

Original Language

Clause	Original	
(iv)	Fuel Supplier – Primary Fuel	Pakistan LNG Limited – PLL

Amended Language

Clause	Amended	
(iv)	Fuel Supplier – Primary Fuel	Sui Northern Gas Pipelines Limited – SNGPL

e. **Schedule-I: Detail of Generation Facility / Thermal Power Plant – (C) (vii), (C) (viii)**

Original Language

Clause	Original	
(vii)	Storage Capacity of each Tanks – Back-Up Fuel	Approx. 20,000 m^3
(viii)	Gross Storage – Back-Up Fuel	Approx. 40,000 m^3

Amended Language

Clause	Amended	
(vii)	Storage Capacity of each Tanks – Back-Up Fuel	Approx. 12,500 m^3
(viii)	Gross Storage – Back-Up Fuel	Approx. 25,000 m^3

The Amendment in storage capacity of HSD tanks was made in line with operational requirements on HSD (Backup Fuel) under the Power Purchase Agreement.

f. **Schedule-I: Detail of Generation Facility / Thermal Power Plant – (F) (i)**

Original Language

Clause	Original	
(i)	Generation Voltage – Steam Turbine	22 kV

Amended Language

Clause	Amended	
(i)	Generation Voltage – Steam Turbine	18.5 kV

g. **Schedule-I: Detail of Generation Facility / Thermal Power Plant – (F) (vi), (vii)**

Original Language

(F). Plant Characteristics

Clause	Original	
(vi)	Tentative Ramping Rate	20 MW/min with holding time
(vii)	Tentative Time Required to Synchronize to Grid	160 Minutes

Amended Language

(F). Plant Characteristics

(vi) The maximum ramping rates of the Complex given below:

Ramping Rate	30 MW/min* *(instead of 20 MW/min)*

**Note: The same is applicable for Complex operating under steady state conditions during normal operation and not during start-up / shutdown.*

During start-up and shutdown of the Complex the following load ramping rates will be applicable:

Complex

Complex load range % age	Cold Start (%MW/Min)	Warm Start (%MW/Min)	Hot Start (%MW/Min)
0<25	0.18	0.33	0.43
>25≤100	0.83	1.25	1.50

Complex loads will be required to be held steady for the following periods for HRSG temperature matching, vacuuming up condenser and temperature stabilization of the steam turbine during load increases as follows:

Hold Time

	Cold Start (Min)	Warm Start (Min)	Hot Start (Min)
At 10 % both GT load	30	30	20
At 25 % 1st GT's load	105	85	45
At 25 % 2nd GT's load	85	65	25
At 25 % ST load	20	20	10

For the purpose of above information, start-up of the Complex is classified as follows:

"Hot Start" A start following a shutdown period of not more than 8 hours.

"Warm Start" A start following a shutdown period of more than 8 hours but less than 72 hours.

"Cold Start" A start following a shutdown period of more than 72 hours.

(vii) The time required to synchronize the Complex to the grid from notice is given below:

Time Required to Synchronize to Grid	80 minutes *(instead of 160 minutes)*

h. **Schedule-II:**

Original Language

(2)	De-rated Capacity of Generation Facility / Thermal Power Plant at Mean Site Conditions	1263.30 MW
(3)	Auxiliary Consumption of the Generation Facility / Thermal Power Plant at Mean Site Conditions	20.50 MW
(4)	Total Net Capacity of Generation Facility / Thermal Power Plant at Mean Site Conditions	1242.70 MW

Amended Language

(2)	De-rated Capacity of Generation Facility / Thermal Power Plant at Mean Site Conditions	1272.21 MW
(3)	Auxiliary Consumption of the Generation Facility / Thermal Power Plant at Mean Site Conditions	28 MW
(4)	Total Net Capacity of Generation Facility / Thermal Power Plant at Mean Site Conditions	1244.21 MW

5. STATEMENT OF REASONS AND JUSTIFICATION

Certain technical parameters provided at the time of application for generation license were tentative as certain parameters of the Complex were not finalized. Now that the Complex has been constructed and tested under PPA. LPM Application is being submitted.

6. IMPACT ASSESSMENT

The proposed LPM Application has no impact on the tariff and performance by licensee of its obligations under the license.

In fact, the quality of service is improved with better ramp rates, time for synchronization, power output etc.

The above is submitted for your consideration, PTPL remains available to provide further required information, if any.

7. **PRAYER / REQUEST**

It is respectfully prayed to the Authority that it shall approve the LPM Application in its Generation License by modifying Schedule-I & II of Generation License No. ***IGSPL/97/2018*** *as proposed.*

Petitioner/ Licensee

Punjab Thermal Power (Private) Limited
Through its Chief Executive Officer
Mr. Salman Zakaria

BOARD OF DIRECTORS' RESOLUTION

CERTIFIED TRUE COPY OF THE EXTRACT FROM THE RESOLUTION PASSED BY THE BOARD OF DIRECTORS OF PUNJAB THERMAL POWER (PRIVATE) LIMITED IN ITS 91st MEETING HELD ON 03.06.2026

(i) **RESOLVED THAT**, "approval of the Board of Directors be and is hereby accorded to submit the Licensee Proposed Modification to Company's Generation License No. IGSPL/97/2018 to NEPRA."

(ii) **FURTHER RESOLVED THAT**, "The Chief Executive Officer and/or any officer(s) authorized by him be and hereby singly authorized to sign the LPM Application, and any documentation ancillary thereto, pay all filing fees, and provide any information required by NEPRA in respect of the Project, and do all acts and things necessary for the processing, completion and finalization of the LPM Application."

CERTIFIED TO BE TRUE COPY

Company Secretary

AFFIDAVIT

E-STAMP

ID : **PB-LHR-453B1D5C81818B15**
Type : **Low Denomination**
Amount : **Rs 300/-**

Scan for online verification

Description : AFFIDAVIT- 4
Applicant : Salman Zakaria [35202-2878391-5]
S/O : Zakaria Khan
Agent : Self
Address : Lahore
Issue Date : 19-Sep-2026 3:11:41 PM
Delisted On/Validity : 26-Sep-2026
Amount in Words : Three Hundred Rupees Only
Reason : Affidavit
Vendor Information : Nasir Mehmood Arshi | PB-LHR-978 | Defence

Sr. # 1231

نوٹ :یہ ٹرانزیکشن تاریخ اجرا سے سات دنوں تک کے لیےقابل استعمال ہے۔ای اسٹامپ کی تصدیق بذریعہ ویب سائٹ،کیوآر کوڈ سے کی جا سکتی ہے

AFFIDAVIT

I, Mr. Salman Zakaria, having CNIC No. 35202-2878391-5, Chief Executive Officer of Punjab Thermal Power (Private) Limited **("PTPL")**, a company incorporated under the Companies Act, 2017, being the duly authorized representative of PTPL, hereby solemnly affirm and declare that the contents of the accompanying Application dated September 21st, 2026 for the Licensee Proposed Modification to PTPL's Generation License No. IGSPL/97/2018 **("LPM")** before the National Electric Power Regulatory Authority **("NEPRA")** by PTPL under enabling laws, rules and regulations, including all the supporting documents, are true and correct to the best of my knowledge and belief.

I also affirm that all further documentation and information to be provided by me in connection with the accompanying LPM shall be true and correct to the best of my knowledge and belief.

DEPONENT

Verified on oath on this 21st Day of September 2026 that the contents hereof are true and correct to the best of my knowledge and belief and nothing has been concealed.

DEPONENT

ANNEX-A: REVISED LAYOUT AND LAND COORDINATES OF THE GENERATION FACILITY / THERMAL POWER PLANT OF THE LICENSEE

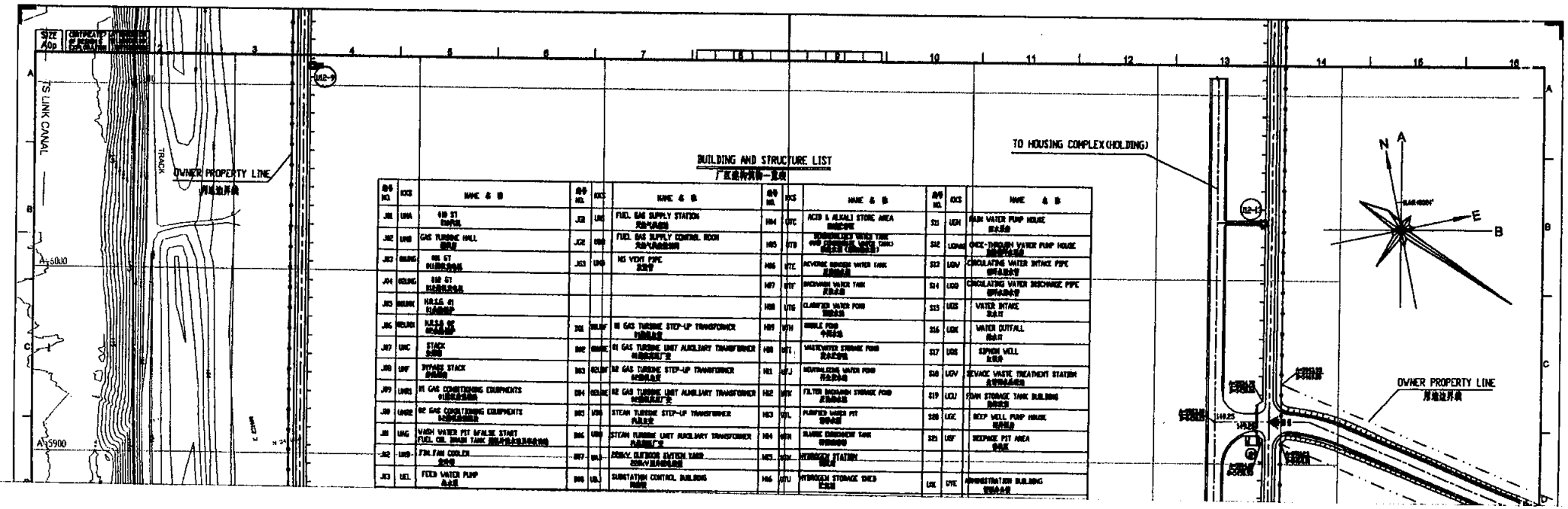

BUILDING AND STRUCTURE LIST
厂区建构筑物一览表

编号 NO.	代号	NAME & 名称	编号 NO.	代号	NAME & 名称	编号 NO.	代号	NAME & 名称	编号 NO.	代号	NAME & 名称
J01	UHA	4th ST 4#汽机	J22	UJE	FUEL GAS SUPPLY STATION 天然气调压站	H04	UTC	ACID & ALKALI STORE AREA 酸碱库房	S11	UEH	RAW WATER PUMP HOUSE 原水泵房
J02	UHB	GAS TURBINE HALL 燃机房	J23	UHD	FUEL GAS SUPPLY CONTROL ROOM 天然气调压间	H05	UTB	DEMINERALIZED WATER TANK 4#机除盐水箱 (4#机生产水箱)	S12	UDM	OWCE-THROUGH WATER PUMP HOUSE 直流循环水泵房
J03	UHJNG	4th ST 4#燃机汽轮机房	J24	UHG	NG VENT PIPE 天然气放空管	H06	UTE	REVERSE OSMOSIS WATER TANK 反渗透水箱	S13	UDV	CIRCULATING WATER INTAKE PIPE 循环水进水管
J04	UHJNG	3rd ST 3#燃机汽轮机房				H07	UTF	BACKWASH WATER TANK 反洗水箱	S14	UDD	CIRCULATING WATER DISCHARGE PIPE 循环水排水管
J05	UHJNK	H.R.S.G. #1 1#余热锅炉				H08	UTG	CLARIFIER WATER POND 澄清水池	S15	UDS	WATER INTAKE 取水口
J06	UHJNX	H.R.S.G. #2 2#余热锅炉	J25	UHJSF	1# GAS TURBINE STEP-UP TRANSFORMER 1#燃机主变	H09	UTH	DOUBLE POND 中和池	S16	UDK	WATER OUTFALL 排水口
J07	UHC	STACK 烟囱	J26	UHJFC	1# GAS TURBINE UNIT AUXILIARY TRANSFORMER 1#燃机厂用变	H10	UTI	WASTEWATER STORAGE POND 废水贮池	S17	UDS	SIPHON WELL 虹吸井
J08	UHF	BYPASS STACK 旁路烟囱	J27	UHJSC	2# GAS TURBINE STEP-UP TRANSFORMER 2#燃机主变	H11	UTJ	NEUTRALIZING WATER POND 中和池	S18	UDV	SEWAGE WASTE TREATMENT STATION 生活污水处理站
J09	UHR1	1# GAS CONDITIONING EQUIPMENTS 1#燃气调压设备	J28	UHJFC	2# GAS TURBINE UNIT AUXILIARY TRANSFORMER 2#燃机厂用变	H12	UTK	FILTER BACKWASH STORAGE POND 滤池反洗水贮池	S19	UDJ	FOAM STORAGE TANK BUILDING 泡沫贮罐间
J10	UHR2	2# GAS CONDITIONING EQUIPMENTS 2#燃气调压设备	J03	UHS	STEAM TURBINE STEP-UP TRANSFORMER 汽机主变	H13	UTL	PURIFIED WATER PIT 清水池	S20	UDC	DEEP WELL PUMP HOUSE 深井泵房
J11	UHG	WASH WATER PIT &FALSE START FUEL OIL DRAIN TANK 清洗水池&启动燃油排放箱	J04	UHD	STEAM TURBINE UNIT AUXILIARY TRANSFORMER 汽机厂用变	H14	UTM	BLANKET DRAINAGE TANK 排水箱	S21	UDF	SEEPAGE PIT AREA 渗坑
J12	UHB	F.W.H.FAN COOLER 给水加热器风冷	J07	UHJ	220KV OUTDOOR SYSTEM YARD 220KV 户外配电装置	H15	UTN	HYDROGEN STATION 制氢站			
J13	UEL	FEED WATER PUMP 给水泵	J08	UEL	SUBSTATION CONTROL BUILDING 集控楼	H16	UTU	HYDROGEN STORAGE SHED 氢气罐	U01	UYE	ADMINISTRATION BUILDING 综合办公楼

ANNEX-B: REVISED SINGLE LINE DIAGRAM (ELECTRICAL) OF THE GENERATION FACILITY / THERMAL POWER PLANT OF THE LICENSEE

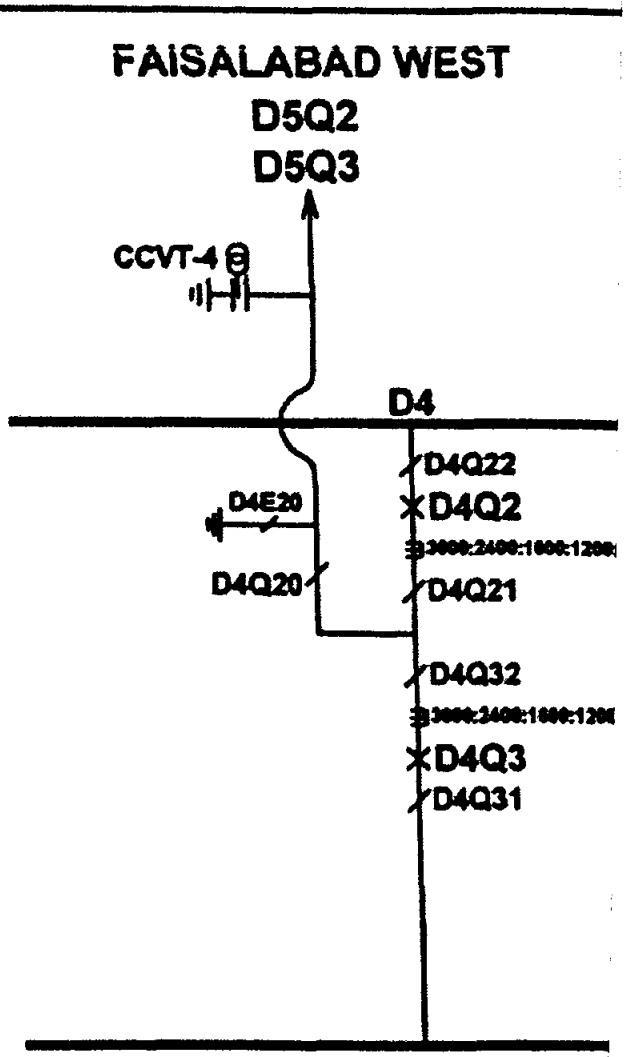

FINAL

PREP BY H.D.M		NATIONAL POWER
CHECKED BY A.D (Drawing)		220 KV SW
CHECKED BY DY.DIR (RCCN)		(1263 MW
APPROVED Director (RCCN)		THERMAL
		(PRIVATE
		DATED.05-04-2022 | 22